贝得
BEIDE

1TL8004 二级能效铸铁系列
低压三相异步电动机

1TL8004 IE4 Cast Iron series Low-voltage Three-phase Asynchronous Motor

产品样本 Catalog
2023.05

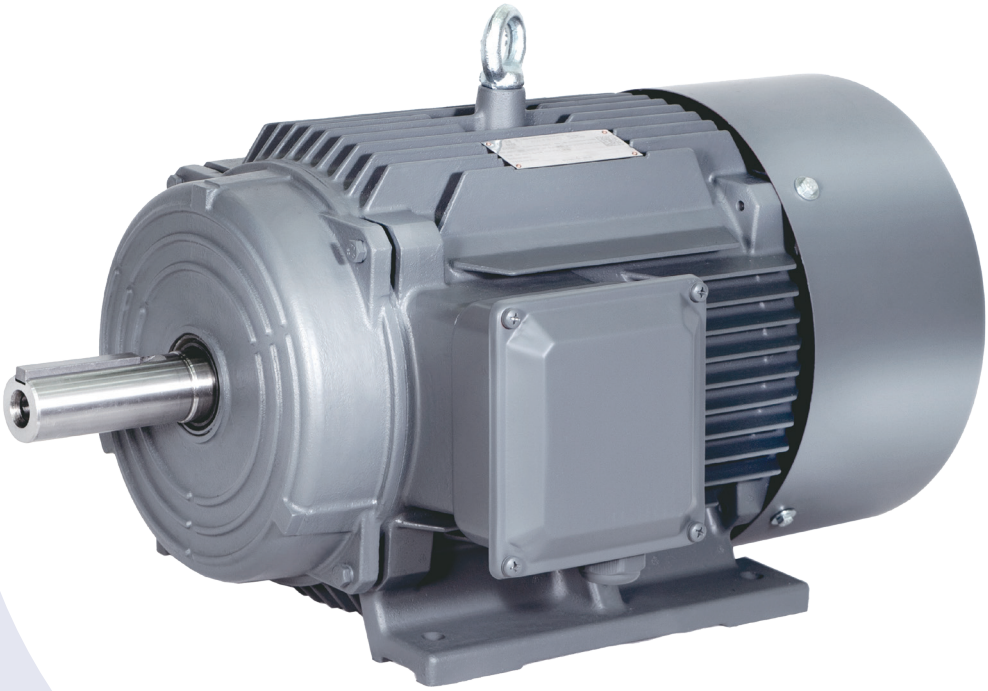

西门子电机（中国）有限公司

公司概况 Company Profile

西门子电机（中国）有限公司 Siemens Standard Motors Ltd. (SSML)

西门子电机（中国）有限公司是西门子在中国的独资企业，位于江苏省仪征市，公司主要致力于研发和生产中小型低压三相异步电动机。目前生产符合 IEC 标准的西门子品牌三相异步电动机、以及按中国标准设计的贝得品牌系列三相异步电动机。

作为西门子在全球中小型低压电机产品的重要生产基地之一，公司秉承西门子 100 多年的电动机设计和生产经验和先进技术，拥有先进的生产设备和生产工艺，采用西门子特色的现代化管理模式，严格按照国际标准 ISO9001:2015 实施全面质量管理，竭诚为广大客户提供优质的产品和服务！

Siemens Standard Motors Ltd. (SSML) is a Siemens-owned company in China. SSML is located in Yizheng City, Jiangsu Province. The company focuses on developing and producing small and medium low-voltage motors. Currently, SSML mainly produce Siemens brand low voltage AC motors according to IEC standards, and Beide brand low voltage motors designed according to China local standards.

As one of Siemens main low-voltage motor production facilities worldwide, SSML uses the knowledge and experience of more than 100 years in motor design and manufacturing, owns the advanced manufacture equipment and process, adopts the SIEMENS modern management model , and implements comprehensive quality control according to ISO9001 2015. SSML will continuously serve customers with high quality products and good service.

公司概况 Company Profile

质量方针

- 质量从我做起，第一次把事情做对。
- 鼓励员工发现问题并勇于承担责任。
- 拒不接受不合格产品。
- 持续改进我们的流程，超越客户期望。

环境方针

西门子电机（中国）有限公司的环境、职业健康和安全方针是：

- 我们依据 ISO14001:2015 和 ISO 45001-2018 标准的要求，有效建立、实施环境和职业健康安全管理体系，不断提高，持续改进。
- 我们承诺遵守环境、职业健康安全相关的法律法规，履行环境保护及职业健康安全防护职责。
- 我们致力于履行应负的社会责任和义务，合理使用资源，保护环境，加强职业健康安全管理，实现安全生产零伤害。

Quality Guideline

- Quality starts with me, Do it right in the first time.
- Encourage our employee to address problem openly and take responsibility.
- Refuse to accept defective product.
- Continuously improve our process to exceed customer's expectation.

Environmental Guideline

EHS Policy of Siemens Standard Motors Ltd. is as follows:

- We institute and implement a continuously improving management system addressing our environment, occupational health and safety in compliance with the requirements of ISO14001:2015 and ISO 45001-2018 criteria.
- We commit ourselves to abiding by the environmental, occupational health and safety laws and regulations, and fulfilling our duties in environmental protecting and occupational health safeguarding.
- We commit ourselves to the fulfillment of our social responsibility and obligation, properly harnessing resources, protecting our environment, enhancing occupational health and safety management with the ultimate goal of zero harm in our production process.

目录 Contents

概述 Overview 5

变频应用 Converter fed application 13

订货号 Order No. 15

选型技术数据表 Technical data table 18

选件 Options 20

外形尺寸 Dimension drawings 22

概述 Overview

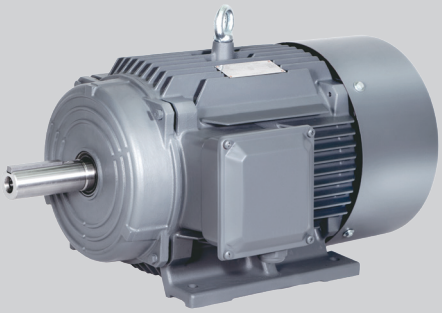

铸铁壳电机 Cast iron housing motor

额定功率：0.55 ~ 2.2 kW，55 ~ 315 kW

机座号：80 ~ 90，315 ~ 355

电压与频率：支持多种电压与频率

冷却方式：IC411

注油装置：机座号 315 ~ 355 的电机标配

防护等级：IP55

绝缘等级：F

环境温度：-15 ~ 40 ºC

海拔高度：不超过 1000 m

Rated output：0.55 ~ 2.2 kW, 55 ~ 315 kW

Frame size：80 ~ 90, 315 ~ 355

Voltage and Frequency：support multiple voltage and frequency

Cooling method：IC411

Oiling device：FS315 ~ 355 motor as standard

Degree of protection：IP55

Degree of insulation：F

Coolant temperature：-15 ~ 40 ºC

Site altitude above see level：not exceed 1000 m

1TL8004 系列电动机是全新设计的高效低压三相异步电动机，机壳为铸铁，适用于连续工作制（S1）工作运行。1TL8004 系列电动机是全新一代设计的满足国家二级能效的电机，结构新颖、造型美观、噪音低、振动小、绝缘等级高等特点，可用于风机、泵、压缩机、纺织机械、皮带机、搅拌机等多种工业应用领域。

1TL8004 series of motors is the newly designed high efficiency low voltage three phase asynchronous motor, the housing material is cast iron, is designed for continuous duty operation(S1). 1TL8004 series of motors is the new designed IE4 efficiency motors, owns the features of novel structure, beautiful appearance, low noise, small vibration, high degree of insulation, etc, also can be used in the fields of fans, pump, compressors, belt conveyor, blender and textile machine.

参考标准 Reference standards

名称 Title	IEC 标准 IEC standard	中国国家标准 Chinese standard
旋转电动机定额和性能 Rotating electrical machines – Part 1: Rating and performance	IEC 60034-1	GB/T 755
旋转电动机损耗与效率确定的标准测试方法 Rotating electrical machines – Part 2-1: Standard methods for determining losses and efficiency from tests (excluding machines for traction vehicles)	IEC 60034-2	GB/T 1032
旋转电机整体结构的防护等级（IP 代码）分级 Rotating electrical machines – Part 5: Degrees of protection provided by the integral design of rotating electrical machines (IP code) - Classification	IEC 60034-5	GB/T 4942.1
旋转电动机冷却方法 Rotating electrical machines – Part 6: Methods of cooling (IC Code)	IEC 60034-6	GB/T 1993
旋转电动机结构型式、安装型式及接线盒位置的分类（IM 代码） Rotating electrical machines – Part 7: Classification of types of construction, mounting arrangements and terminal box position (IM Code)	IEC 60034-7	GB/T 997
旋转电动机旋转电机线端标志与旋转方向 Rotating electrical machines – Part 8: Terminal markings and direction of rotation	IEC 60034-8	GB/T 1971
旋转电机噪声测定方法及限值　第 3 部分：噪声限值 Rotating electrical machines – Part 9: Noise limits	IEC 60034-9	GB 10069.3
轴中心高为 56 mm 及以上电机的机械振动　振动的测量、评定及限值 Rotating electrical machines – Part 14: Mechanical vibration of certain machines with shaft heights 56 mm and higher – Measurement, evaluation and limits of vibration severity	IEC 60034-14	GB 10068
旋转电机尺寸和输出功率等级　第 1 部分：机座号 56 ~ 400 和凸缘号 55 ~ 1080 Rotating electrical machines – Part 1: Frame numbers 56 to 400 and flange numbers 55 to 1080	IEC 60072-1	GB/T 4772.1
中小型旋转电机安全要求 Safety requirements of small and medium size rotating electrical machines		GB 14711
电气绝缘 耐热性和表示方法 Electrical insulation – Thermal evaluation and designation	IEC 60085	GB/T 11021
电工电子产品自然环境条件　温度和湿度 Classification of environmental conditions Part 2-1: Environmental conditions appearing in nature – Temperature and humidity	IEC 60721-2-1	GB/T 4797.1
标准电压 Standard voltages	IEC 60038	GB/T 156

铭牌样例 Nameplate

1TL8004 系列电机铭牌

1TL8004 Motor Nameplate

电机配封闭式轴承铭牌样例

Example of motor with sealed bearing nameplate

电机配可再润滑性轴承铭牌样例

Example of motor with regreasable bearing nameplate

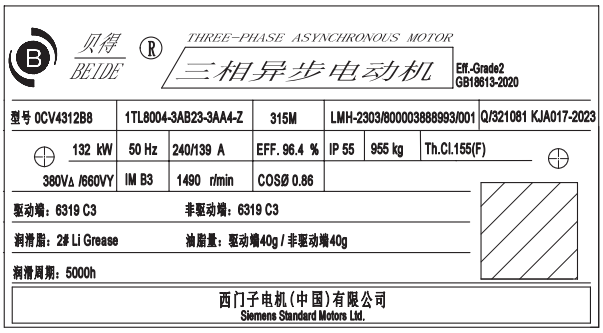

安装结构型式 Construction and mounting type

结构型式 Construction type	机座带底脚，端盖无法兰 With feet and without flange on the end-shield (DE)					
安装型式 Mounting type	IM B3 FS80 ~ 90，FS315~355	IM B6 80 ~ 90	IM B7 80 ~ 90	IM B8 80 ~ 90	IM V5 80 ~ 90	IM V6 80 ~ 90
示意图 Diagram						

结构型式 Construction type	机座不带底脚，端盖有法兰 Without feet and with flange on the end-shield (DE)			机座带底脚，端盖有法兰 With feet and with flange on the end-shield (DE)		
安装型式 Mounting type	IM B5 80 ~ 90	IM V1 [1)2)] FS80 ~ 90，FS315~355	IM V3 [2)] 80 ~ 90	IM B35 FS80 ~ 90，FS315~355	IM V15 80 ~ 90	IM V35 80 ~ 90
示意 Diagram						

结构型式 Construction type	机座不带底脚，端盖有标准小法兰 Without feet and with C-flange on the end-shield (DE)			机座带底脚，端盖有标准小法兰 With feet and with C-flange on the end-shield (DE)
安装型式 Mounting type	IM B14 80 ~ 90	IM V18 80 ~ 90	IM V19 80 ~ 90	IM B34 80 ~ 90
示意图 Diagram				

[1)] 室外使用时推荐使用护罩（选件号 H00）；

[2)] 此安装方式中，标配全圆法兰。

[1)] At outdoor application, the using of protective cover (Option code H00) is recommended

[2)] Full circle flange as standard configuration in this type mounting.

轴承系统

1TL8004 系列电动机标准配置深沟球轴承或角接触球轴承，这些轴承是可再润滑型的。

FS80 ~ 90 电动机驱动端与非驱动端轴承浮动；FS315 ~ 355 电动机驱动端轴承浮动，非驱动端轴承固定。

标准配置的轴承可以承受一定的悬臂力，当电动机轴端承受的悬臂力较大时，可以考虑选择增强悬臂力的轴承设计（选件号：L22）。

Bearing system

1TL8004 series motors are supplied with the ball bearing as standard. These bearings are regreasable type.

For FS80 ~ 90, the floating bearings are assembled. For FS315 ~ 355, floating bearing at DE, and fixed bearing at NDE assembled.

The standard bearing can endure a maximum cantilever force, the increased cantilever bearing design (Option code: L22) should be considered.

轴承选配 Bearing Assignment

机座号 Frame size	极数 Pole	标准配置 Standard design			增强悬臂力设计轴承(选件号L22) Increased cantilever-bearing (Option code:L22)		
		驱动端轴承 DE bearing	非驱动端轴承（水平安装） NDE bearing (Horizontal mounting)	非驱动端轴承（竖直安装） NDE bearing (Vertical mounting)	驱动端轴承 DE bearing	非驱动端轴承（水平安装） NDE bearing (Horizontal mounting)	非驱动端轴承（竖直安装） NDE bearing (Vertical mounting)
80	2, 4, 6	6204 2Z C3	6204 2Z C3	6204 2Z C3	□	□	□
90	2, 4, 6	6205 2Z C3	6205 2Z C3	6205 2Z C3	□	□	□
315	2	6316 C3	6316 C3	6316 C3	NU316	6316 C3	6316 C3
	4, 6, 8	6319 C3	6319 C3	6319 C3	NU319	6319 C3	6319 C3
355	2	6317 C3	6317 C3	7317	NU317	6317 C3	O.R.
	4, 6, 8	6322 C3	6322 C3	7322	NU322	6322 C3	O.R.

注：DE 驱动端
NDE 非驱动端
– 不能满足
O.R. 须要特殊询价

Note: DE Driven end
NDE Non driven end
– Not possible
O.R. Possible on request

润滑脂寿命和再润滑周期

对于以规定间隔再润滑的电机，轴承寿命可以延长，从而补偿不利因素，诸如温度、安装条件、转速、轴承规格和机械载荷造成的影响。

Grease life and re-greasing interval

For motors which can be regreased at defined regreasing intervals, the bearing lifetime can be extended and/or unfavorable factors such as temperature, mounting conditions, speed, bearing size and mechanical load can be compensated.

润滑脂寿命和再润滑周期（电动机水平安装） Grease life (Horizonal installation)

机座号 Frame size	极数 Poles	润滑脂寿命 Grease lifetime up to CT 40 ºC
持久润滑型轴承的润滑脂 Grease for permanent lubrication bearing		
80 ~ 90	2, 4, 6	20000 h
可再润滑型轴承的润滑脂 Grease for regreasable bearing		
315	2	3000 h
	4, 6, 8	5000 h
355	2	3000 h
	4, 6, 8	4000 h

当电动机在非正常的条件下运行时，轴承的寿命会缩短。如下面几种情况：

- 当电动机的运行速度高于额定速度时，由于电动机的振动增大，使得轴承受到额外的径向力和轴向力，导致其寿命减少；
- 当环境或设备等因素引起电动机振动加大时，同样轴承也会因此受到额外的径向力和轴向力，而导致其寿命减少；
- 当环境温度每升高 10°C，润滑脂寿命以及再润滑时间缩短一半。

- When motor runs beyond the rated speed, the increase of motor vibration will result in the extra radial and axial force on bearing. This will reduce the life of bearing;
- When the motor vibration increase due to the environment or other equipment, the bearing also will endure more radial and axial force. This also will reduce the life of bearing;
- If the coolant temperature is increased by 10 ºC, the grease lifetime and regreasing interval is halved.

电动机轴驱动端允许的最大悬臂力 Permissible cantilever forces on DE shaft

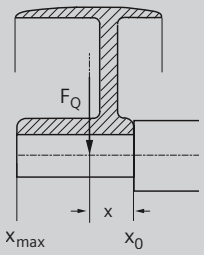

为了计算径向负载的最大悬臂力，距轴肩处的悬臂力 F_Q（N）必须位于轴伸端以内，（长度为 x）。长度 x［mm］是距离轴肩的距离。长度最长为 x_{max}，与轴伸长度相同。总的悬臂力 F_Q 使用以下公式计算。

$$F_Q = c \bullet F_U$$

预紧力系数 c 是从皮带制造商那得到的经验数值，下面的估算值可以应用。

- 对于一般扁平的皮带，c = 2；
- 对于 V 型皮带，c = 2 ~ 2.5；
- 对于特殊的皮带（取决于皮带类型和负载），c = 2 ~ 2.5。

计算切向力 F_U（N）使用下列公式：

$$F_U = 2 \bullet 10^7 \frac{P}{n \times D}$$

F_U 切向力（N）
P 额定功率（kW）
n 额定转速
D 滑轮直径（mm）

In order to calculate the admissible cantilever forces for a radial load, the line of force (i.e. the centerline of the pulley) of the cantilever force F_Q(N) must lie within the free shaft extension (dimension x).Dimension x [mm] is the distance between the point of application of force F_Q and the shaft shoulder. Dimension x_{max}. Corresponds to the length of the shaft extension. Total cantilever force is calculated using the following equation.

$$F_Q = c \bullet F_U$$

The pre-tension factor c is a value gained from experience from the belt manufacturer. The following approximate value can be assumed.

- For normal flat leather belts with an idler pulley, c = 2.
- For v-belts, c = 2 to 2.5.
- For special synthetic belts (depending on the type and load),
  c = 2 to 2.5.

The circumferential force F_U (N) is calculated using the following equation.

$$F_U = 2 \bullet 10^7 \frac{P}{n \times D}$$

F_U circumferential force in N
P rated motor power (transmitted power) in kW
n rated motor speed
D pulleys in mm.

假设电动机不受任何轴向力，下面的表格中列出了允许的径向悬臂力值（单位：牛顿）。

The table below contains the permissible Radial Force values in Newtons with the assumption of zero axial forces.

标准电机最大悬臂力 Admissible cantilever forces for standard version				增强悬臂力的轴向设计（编号 L22） Bearing design for increased cantilever forces Order code L22	
机座号 Frame size	极数 Number of poles	悬臂力范围 Admissible cantilever force		悬臂力范围 Admissible cantilever force	
		for x_0 N	for x_{max} N	for X_0	for X_{max}
80M	2	620	510	-	-
	4	790	640	-	-
	6	910	740	-	-
90S 90L	2	700	560	-	-
	4	880	720	-	-
	6	1020	820	-	-
315S 315M 315L	2	6150	5200	21350	9050
	4	8790	7350	34240	13200
	6	10350	8550	38600	13100
	8	11450	9450	42200	12950
355M 355L	2	6430	5700	22920	12300
	4	12000	10400	44450	20800
	6	13050	11300	49500	20500
	8	14500	12550	54000	20500

接线盒技术参数 Connection boxes technical data

机座号 Frame size	接线螺钉螺纹 Contact screw thread	外接电缆直径 (mm) Outer cable diameter (sealing range)	进线孔尺寸 Cable entry size
80 ~ 90	M4	13 ~ 18	M25 × 1.5
315	M12	37 ~ 44	M63 × 1.5+M63 × 1.5
355	M16	38 ~ 47	M72 × 2 + M72 × 2

振动

所有电动机转子都使用半键按照 A 级（标准）振动等级进行动态平衡。

电动机在空载时测得振动速度有效值不超过下表中的 A 级所列值。

Vibration

1TL8004 rotors are dynamically balanced to severity grade A using a half key.

Table below contains the effective vibration values for unloaded motors.

振动等级 Vibration Grade	机座号 Frame size (mm)	56 ≤ FS ≤ 132		H>132	
	安装方式 Mounting	位移 Vibration displacement/um	速度 Vibration velocity/(mm/s)	位移 Vibration displacement/um	速度 Vibration velocity/(mm/s)
A	自由悬置 Free suspension	45	2.8	45	2.8
	刚性安装 Rigid mounting	-	-	37	2.3
					2.8[1)]
B	自由悬置 Free suspension	18	1.1	29	1.8
	刚性安装 Rigid mounting	-	-	24	1.5
					1.8[1)]

注：

1) 该值为GB/T 10068-2020 中定义的轴中心高H>132mm的两极电机，当两倍电网频率占主导时的振动速度限值。

Note:

1) The level are vibration velocity limit when the twice line frequency vibration level is dominant defined by GB/T 10068-2020, for 2p motors that frame size bigger than 132mm.

防潮加热保护

当电动机处于较为恶劣的环境时，比如湿度非常大或者昼夜温差比较大，电动机的绕组很可能出现凝露的现象，这样会带来电动机烧毁的风险。对于这种情况，建议对电动机绕组配置防潮加热带（选件号：Q04）进行保护。

电动机防潮加热带必须在电动机工作过程中处于不工作状态；当电动机停机时，防潮加热带必须启动工作，为绕组加热。防潮加热带的电气参数如下表所示。

Anti-condensation heater

Motors whose windings are at risk of condensation due to the climatic conditions, e.g. inactive motors in humid atmospheres or motors that are subjected to widely fluctuating temperatures can be equipped with anti-condensation heaters (Option code: Q04).
Anti-condensation heaters must be switched off during operation. When motor shut down, the heaters must be switched on.

防潮加热带电气参数Electrical data of Anti-condensation heater

机座号 Frame size	功率 Power（W）	电压 Voltage（V）
80 ~ 90	20	220
315	80	220
355	100	220

电气特性

额定输出

1TL8004电动机的额定功率是指电动机在连续运行的情况下 S1（IEC 60034-1），此时周围环境温度为 -15 ºC ~ 40 ºC，海拔高度不超过 1000 m。

电压、频率

IEC 60034-1 将电压和频率的偏差分为 A 类（电压偏差 ±5 %，频率偏差 ±2 %）和 B 类（电压偏差 ±10 %，频率偏差 +3 % / -5 %）。电动机均能够在 A 类和 B 类提供额定转矩。在 A 类中，温度比正常运行下温度大约提升 10 K。

Electrical design

Rated Output

1TL8004 motors rated output powers means that the motor runs under continuous duty S1 (IEC 60034 - 1) operation when operated at ambient temperature from -15 ºC to 40 ºC and at altitudes of up to 1000 m over sea.

Voltage and Frequency

IEC 60034-1 differentiates between Category A (combination of voltage deviation ±5 % and frequency deviation ±2 %) and Category B (combination of voltage deviation ±10 % and frequency deviation +3 % / -5 %) for voltage and frequency fluctuations. The motors can supply their rated torque in both Category A and B. In Category A, the temperature rise is approximately 10 K higher than during normal operation.

标准Standard 60034 - 1	类别Category A	类别Category B
电压偏差Voltage deviation	±5 %	±10 %
频率偏差Frequency deviation	±2 %	+3 % / -5 %
根据标准，不推荐电动机在 B 类情况下长时间运行 According to the standard, longer operation is not recommended for Category B.		

电气数据公差

■ 效率 η

Prated ≤ 150 kW: - 0.15 x (1 – η)

Prated > 150 kW: - 0.10 x (1 – η)

效率 η 为小于 1 的值

■ 功率因数：(1 – cos ϕ) / 6

最小绝对值：0.02

最大绝对值：0.07

■ 转差率：±20 %（电动机的偏差 < 1 kW ± 30 % 时是允许的）

■ 堵转电流：+20 %

■ 堵转转矩：-15 % ~ +25 %

■ 最大转矩：-10 %

■ 转动惯量：±10 %

Tolerance for electrical data

■ Efficiency η at

Prated ≤ 150 kW: - 0.15 x (1 – η)

Prated > 150 kW: - 0.10 x (1 – η)

With η being a decimal number

■ Power factor - (1 – cos ϕ) / 6

Minimum absolute value: 0.02

Maximum absolute value: 0.07

■ Slip ±20 % (for motors < 1 kW ±30 % is admissible)

■ Locked-rotor current +20 %

■ Locked-rotor torque -15 % to +25 %

■ Breakdown torque -10 %

■ Moment of inertia ±10 %

变频应用 Converter fed application

1TL8004 电动机适于变转速、恒转速的各种应用，如风机、泵、压缩机、纺织机械等。

1TL8004 motors are suitable for pumps, fans, compressors, textile machine and mechanical machine applications where variable or constant speed is required.

1TL8004 电动机的标准绝缘系统设计要求，FS80~90 能够保证其在变频器供电电压不超过 380V 时正常运行，FS315-355 能够保证其在变频器供电电压不超过 480 V 时正常运行。

The standard insulation of the 1TL8004 motors is designed such that operation is possible on the converter at mains voltage up to 380V for FS80~90, converter at main voltage up to 480V for FS315~355.

1TL8004 电动机带有特定的负载时能够使用变频器驱动，其特定的负载扭矩如以下图表所示：

1TL8004 motors are capable for converter-fed operation with certain characteristics load, of which the load torque characteristics is referred in the following diagram:

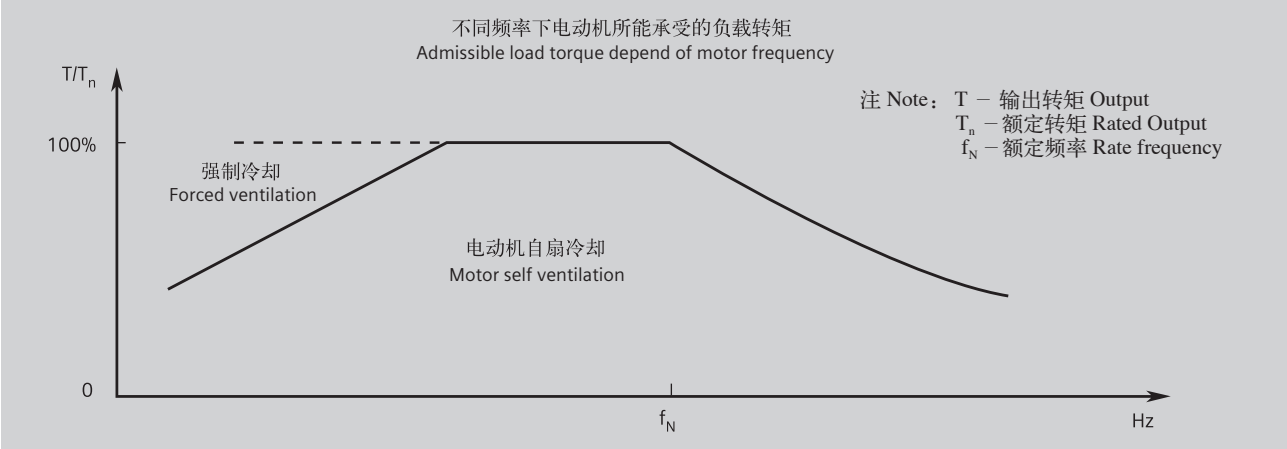

当 1TL8004 电动机变频应用（变频器供电），且输出额定功率时，电动机的使用温度等级为 155（F）。为了避免杂散电流对电动机轴承的损坏，推荐 FS315 ~ 355 电动机使用绝缘轴承。请向西门子咨询关于绝缘轴承的详细信息。

At rated output with converter fed operation, the motors will be used in temperature class 155 (F). To prevent damage as a result of bearing currents, insulated bearings are recommended to be assembled for frame size 315 and above. Please inquire Siemens about the detailed information of insulated bearing.

当负载转矩在允许的转矩范围内时，电动机能够自扇冷却；当负载转矩超过所允许的转矩时，电动机需要强迫冷却。

在电动机运行速度超过额定转速时，噪声和振动值将增加，并且轴承的寿命将缩短。需要注意再润滑周期和润滑脂的寿命。

By usage with admissible torque and below, the motor can be operated with self cooling; by usage over the admissible torque line, the motor with forced ventilation is needed.

At operating speeds above rated speed the noise and vibration levels increase and the bearing life time reduce. Attention should be paid to the re-greasing intervals and the grease service life.

1TL8004 电动机所允许的最大安全转速如下表

The allowed maximum safe operating speed of 1TL8004 motors shows the diagram

机座号 Frame size	2 极 2 pole		4 极 4 pole		6 极 6 pole		8 极 8 pole	
	最高转速 Max.rpm	最大频率 fmax	最高转速 Max.rpm	最大频率 fmax	最高转速 Max.rpm	最大频率 fmax	最高转速 Max.rpm	最大频率 fmax
80	5200	87	3600	120	2400	120	-	-
90	5200	87	3600	120	2400	120	-	-
315	3600	60	2300	77	1800	90	1400	93
355	3600	60	2300	77	1800	90	1400	93

独立驱动风扇技术参数 Technical data for separately fan

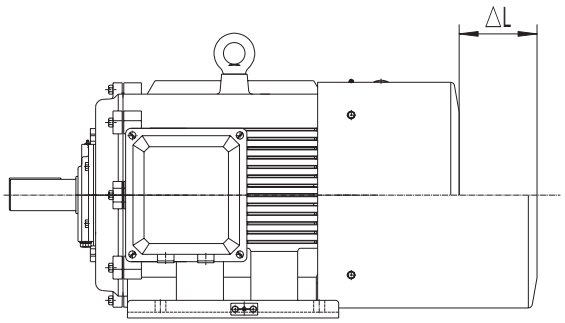

独立驱动风扇技术参数 Technical data for separately fan

对应电动机机座号 Motor frame size	额定电压 (V) rated voltage	额定频率 (Hz) Rated frequency	功率 (W) Rated output	电流 (A) Current	ΔL
80	220D/380Y	50	30	0.14/0.08	75
90		50	30	0.14/0.08	80
315		50	370	1.91/1.1	95
355		50	550	2.18/1.26	80

注： 风扇可以在 210 ~ 240VD/360 ~ 420VY 50Hz 电源供电下运行，也可以在 220 ~ 260VD/380 ~ 480VY 60Hz 电源供电下运行。其他电压电源供电，须特殊询价。

Note: The fan can be running with supply 210 ~ 240VD/360 ~ 420VY 50Hz, and also 220 ~ 260VD/380 ~ 480VY 60Hz. Other voltage supply, possible on request.

风机电机参数 Technical data for fan motor

对于某些客户现场有外部冷却设备的应用，可以提供无风扇和风扇罩的风机电机，风机电机的选件号为 F90。当电机无风扇和风扇罩时，电动机的长度将减少 Δl。

For some special application with external cooling facility, we can provide motor without fan and fan cover, the option code is F90. When motor without fan and fan cover, the length will decrease Δl.

对应电动机机座号 motor frame size	F90 电机减少长度 Δl Length decrease of motor Δl
80	45
90	45
315	185
355	190

型号与订货号 Motor Type and Order No.

电动机订货号

1	2	3	4	5	6	7		8	9	10	11	12		13	14	15	16
1	T	L	8	0	0	4	–						–				

低压系列电动机 Low-voltage motor series

0= 铸铁壳
0=Cast Iron

效率等级 Efficiency Grade
4 = 中国能效等级 2 级，IE4 效率等级
4 = China energy efficiency grade 2, IE4 efficiency

机座号编号 Code of frame size
0D = 080 / 0E = 090
3A = 315 / 3B =355

极数编号 Code of poles
A = 2 / B = 4 / C = 6 / D = 8

机座长度编号 Code of frame lengt
0 or 1 = S (short) / 2 or 3 or 4 = M (medium) / 4 or 5 or 6 or 7 = L (long)

电压，连接方式和频率编号 Code of voltage, connections and frequency

	22[8] = 230VD / 400VY 50Hz	35 = 415VD 50Hz
21[8] = 220VD / 380VY 50Hz	23[8] = 240VD / 415VY 50Hz	90[1] = 特殊电压与频率 special voltage & frequenc
33 = 380VD / 660VY 50Hz	34 = 400VD / 690VY 50Hz	

结构和安装方式编号 Code of Construction and mounting type

	T[2] = IM B6		
A[2] = IM B3	U[2] = IM B7	W[2) 4)] = IM V15	M[2) 3) 4)] = IM V18
J[2] = IM B35	V[2] = IM B8	Y[2] = IM V35	L[2) 4)] = IM V19
F[2) 3)] = IM B5	C[2) 4)] = IM V5	G[2) 3) 4)] = IM V1	N[2] = IM B34
K[2) 3)] = IM B14	D[2] = IM V6	H[2) 3)] = IM V3	

绕组保护编号 Code of winding protection
A = 无绕组保护 without winding protection
B[5] = 绕组带 3 个 PTC 热敏电阻用于跳闸 3 PTC thermistors for tripping
C[5] = 绕组带 6 个 PTC 热敏电阻用于报警和跳闸 6 PTC thermistors for alarm and tripping
H [5)6)] = 绕组带 3 个 Pt100 测温元件 3 resistance thermometers Pt100
J[5)6)] = 绕组带 6 个 Pt100 测温元件 6 resistance thermometers Pt100
Z[7] = 其他绕组保护 Other temperature for winding protection

接线盒位置编号（从驱动端看） Code location of connection box (view from drive end)
4 = 顶端出线 top / 5 [9] = 右端出线 on RHS / 6 [9] = 左端出线 on LHS

型号与订货号 Motor Type and Order No.

附注：

1) 用电压编号 90 及相应选件号来定制其它电压（参见选件描述）；

2) 铭牌上标有结构型式。若需要冷凝水排放孔（订货号：H03），则必须指明电机的安装结构型式，以便在制造过程中确定冷凝水排放孔的具体位置；

3) 对于 IM B5、IM V1、IM V3、IM B14、IM V18 和 IM V19 安装结构型式电动机，须指定电动机订货号第 16 位数字为 “4”；

4) 电动机标配无防雨罩，但如需要加带防雨罩用于防护时，须订 购选件号 H00；

5) 选择此选件，接线盒将更改为铸铁壳；

6) 仅适用于机座号 315-355；

7) 请向西门子另行咨询；

8) 不适用于 FS315 ~ 355 电机；

9) FS80 ~ 90 进线孔的方向朝向非驱动端。

Foot note:

1) Order other voltages with voltage code 90 and the corresponding Option code (see under "Option") .

2) The type of construction is stamped on the rating plate. When ordering with condensation drainage holes (order code H03), it is absolutely necessary to specify the type of construction for the exact position of the condensation drainage holes during manufacture.

3) For motor with IM B5, IM V1, IM V3, IM B14, IM V18 and IM V19 construction and mounting type, the 16th digit of motor order No. must be "4";

4) Without canopy, for protective cover with canopy needed Option code H00.

5) Choose this option, the connection box will be changed to cast iron.

6) Only applicable for frame size 315-355.

7) Please specially consult with Siemens.

8) Not applicable for FS315 ~ 355 motors.

9) FS80~90 cable entry on connection box towards the non-drive.

电机型号[1] Motor type

1	2	3	4	5	6	7	8	9
0	□	V	4	□	□	□	□	8

亚太系列 Asia pacific

机壳材料 Housing material
C = 铸铁 Cast iron

冷却方式 Cooling method
V = 空冷 ventilated

能效等级，Energy efficiency grade
4 = 中国能效等级 2 级，IE4 效率等级
4 = China energy efficiency grade 2, IE4 efficiency

机座号 Frame size
08 = 80；09 = 90；31 = 315；35 = 355

铁心长 Core length

极数 Poles
A = 2；B = 4；C = 6；D = 8

1) 电机型号可用于能效备案及查询。

1) Motor type can be used for energy efficiency filing.

订货号样例：

2 级能效低压三相异步电动机

4 极，132 kW，IM B3，380VD / 660VY 50 Hz，IP55，接线盒位置处于右侧，进线孔向下 （从驱动端看）。

电动机订货号：1TL8004-3AB23-3AA5

Order No. example:

China Energy Efficiency Grade2 low voltage three phase asynchronous motor

4-pole, 132 kW, IM B3, 380VD/660VY 50 Hz, IP55, connection box at right side and cable entry at bottom (view from DE)

Motor order code: 1TL8004-3AB23-3AA5

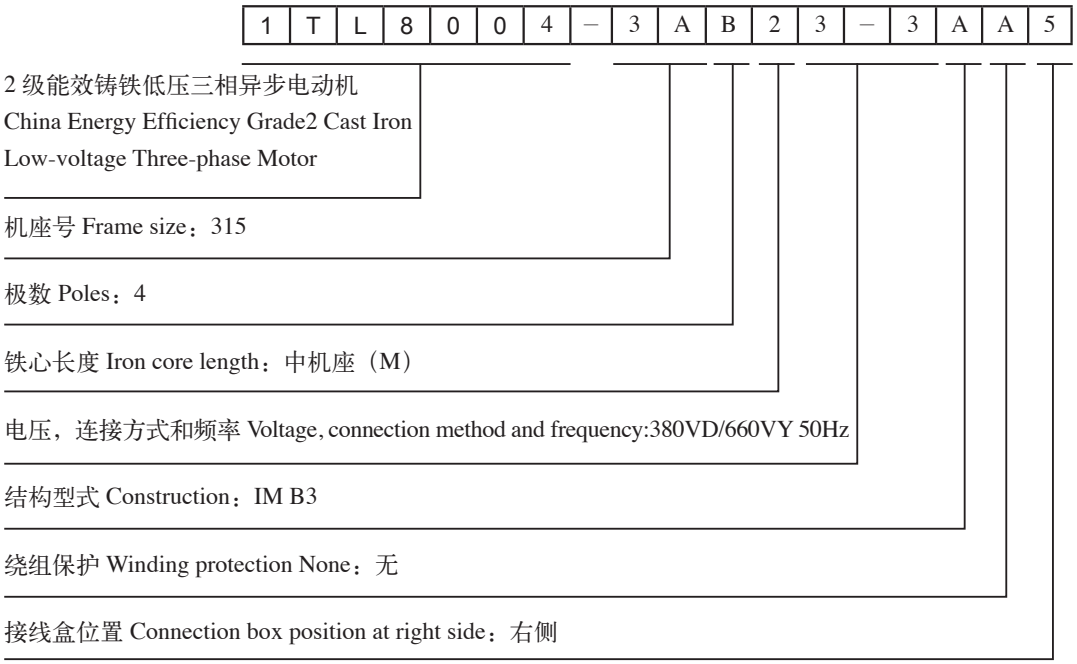

选型技术数据表 Technical data table

铸铁壳系列电机 Cast Iron Motors

中国能效等级2级, IE4

机座号 Frame Size	额定功率 Rate Output 50 Hz	电动机型号 Motor type	订货号 Order No.	额定转速 Rated Speed	效率 — 参照 GB18613-2020 效率等级 2 Efficiency is in accordance with the efficiency level 2 of GB18613-2020				额定转矩 Rated torque	起动电流 / 额定电流 Starting current /Rated current	起动转矩 / 额定转矩 Starting torque/ Rated torque	最大转矩 / 额定转矩 Max torque /Rated torque	转动惯量 Moment of Inertia	重量 IMB3 Weight	噪声 Noise
					效率 (100% 负载) Efficiency at (50 HZ) 4/4 load	效率 (75% 负载) Efficiency at (50 HZ) 3/4 load	功率因数 Power factor	额定电流 Rated current							
	kW			rpm	%	%		A	Nm	I_{LR}/I_{rated}	T_{LR}/T_{rated}	T_{max}/T_{rated}	kgm²	kg	L_{pfa}/L_{WA}
			3000rpm 2 极 2-pole												
			220VD / 380VY 50HZ												
80M	0.75	0CV4082A8	1TL8004-0DA22-1 □□□	2885	83.5	83.3	0.83	1.64	2.5	7.9	2.6	3.1	0.00152	15	54/65
80M	1.1	0CV4083A8	1TL8004-0DA32-1 □□□	2900	85.2	85.0	0.83	2.35	3.6	8.0	3.0	3.3	0.00175	16	54/65
90S	1.5	0CV4090A8	1TL8004-0EA02-1 □□□	2910	86.5	86.2	0.85	3.10	4.9	9.7	3.2	3.2	0.00339	21	57/69
90L	2.2	0CV4094A8	1TL8004-0EA42-1 □□□	2910	88.0	87.8	0.86	4.40	7.2	9.7	3.4	3.5	0.00437	25	57/69
			3000rpm 2 极 2-pole												
			380VD / 660VY 50HZ												
315S	110	0VC4310A8	1TL8004-3AA03-3 □□□	2982	96.0	95.9	0.89	196	352	8.5	2.1	2.4	1.85	820	77/92
315M	132	0VC4312A8	1TL8004-3AA23-3 □□□	2982	96.2	96.2	0.89	235	423	8.5	2.5	2.7	2.15	895	77/92
315L	160	0VC4315A8	1TL8004-3AA53-3 □□□	2982	96.3	96.4	0.89	285	512	8.5	2.5	2.6	2.47	970	77/92
315L	185	0VC4316A8	1TL8004-3AA63-3 □□□	2982	96.4	96.6	0.89	330	592	8.5	2.7	2.6	2.85	1080	77/92
315L	200	0VC4317A8	1TL8004-3AA73-3 □□□	2975	96.5	96.8	0.89	355	642	7.5	2.3	2.2	2.85	1100	77/92
355M	220	0VC4352A8	1TL8004-3BA23-3 □□□	2986	96.5	96.3	0.91	380	704	8.5	2.6	2.6	2.91	1430	82/97
355M	250	0VC4353A8	1TL8004-3BA33-3 □□□	2982	96.5	96.4	0.91	435	801	8.5	2.4	2.4	2.91	1430	82/97
355L	280	0VC4355A8	1TL8004-3BA53-3 □□□	2985	96.5	96.4	0.91	485	896	8.5	3.0	3.1	3.41	1570	82/97
355L	315	0VC4356A8	1TL8004-3BA63-3 □□□	2982	96.5	96.4	0.91	540	1009	8.5	3.0	3.1	3.41	1600	82/97
			1500rpm 4 极 4-pole												
			220VD / 380VY 50HZ												
80M	0.55	0CV4082B8	1TL8004-0DB22-1 □□□	1445	83.9	83.5	0.74	1.35	3.6	7.0	2.4	2.8	0.00235	16	45/56
80M	0.75	0CV4083B8	1TL8004-0DB32-1 □□□	1445	85.7	85.6	0.74	1.80	5.0	7.0	3.0	3.1	0.00312	18	45/56
90S	1.1	0CV4090B8	1TL8004-0EB02-1 □□□	1450	87.2	86.5	0.75	2.55	7.2	8.2	3.0	3.8	0.00552	21	47/59
90L	1.5	0CV4094B8	1TL8004-0EB42-1 □□□	1450	88.2	87.5	0.76	3.40	9.9	8.2	3.0	3.8	0.00622	26	47/59
			1500rpm 4 极 4-pole												
			380VD / 660VY 50HZ												
315S	110	0VC4310B8	1TL8004-3AB03-3 □□□	1491	96.3	96.5	0.86	200	705	8.5	2.8	2.5	3.35	915	69/84
315M	132	0VC4312B8	1TL8004-3AB23-3 □□□	1490	96.4	96.7	0.86	240	846	7.8	2.6	2.3	3.53	955	69/84
315L	160	0VC4315B8	1TL8004-3AB53-3 □□□	1490	96.6	96.9	0.87	290	1026	8.5	3.0	2.2	4.24	1120	71/86
315L	185	0VC4316B8	1TL8004-3AB63-3 □□□	1490	96.7	97.0	0.87	335	1186	8.5	3.1	2.2	4.64	1180	71/86
315L	200	0VC4317B8	1TL8004-3AB73-3 □□□	1490	96.7	97.0	0.87	360	1282	8.5	3.2	2.3	4.92	1220	71/86
355M	220	0VC4352B8	1TL8004-3BB23-3 □□□	1490	96.7	96.9	0.88	395	1410	8.5	2.5	2.8	5.7	1630	76/91
355M	250	0VC4353B8	1TL8004-3BB33-3 □□□	1490	96.7	96.9	0.88	445	1602	8.5	2.3	2.8	5.92	1670	76/91
355L	280	0VC4355B8	1TL8004-3BB53-3 □□□	1490	96.7	96.9	0.88	500	1795	8.5	2.4	2.6	6.19	1760	76/91
355L	315	0VC4356B8	1TL8004-3BB63-3 □□□	1490	96.7	97.0	0.88	560	2019	8.5	2.3	2.6	6.67	1840	76/91

注：

[1] 关于其他电压与频率、绕组保护及接线盒位置的编码，请见“订货号”部分；

[2] 噪声值仅适用于电动机在 50 Hz 电源直接供电且空载运行时的情况，容差为 +3 dB。

Note:

[1] About the code of other voltage and frequency, winding protection and connection box position, please refer to Orde No.

[2] Noise value is only applicable to the direct power supply of the motor in 50Hz power supply and the condition of no-load operation, the tolerance is +3dB.

选型技术数据表 Technical data table

铸铁壳系列电机 Cast Iron Motors

中国能效等级2级, IE4

机座号 Frame Size	额定功率 Rate Output 50 Hz	电动机型号 Motor type	订货号 Order No.	额定转速 Rated Speed	效率 — 参照 GB18613-2020 效率等级 2 Efficiency is in accordance with the efficiency level 2 of GB18613-2020				额定转矩 Rated torque	起动电流 / 额定电流 Starting current /Rated current	起动转矩 / 额定转矩 Starting torque/ Rated torque	最大转矩 / 额定转矩 Max torque / Rated torque	转动惯量 Moment of Inertia	重量 IMB3 Weight	噪声 Noise
					效率 (100% 负载) Efficiency at (50 HZ) 4/4 load	效率 (75% 负载) Efficiency at (50 HZ) 3/4 load	功率因数 Power factor	额定电流 Rated current							
	kW			rpm	%	%		A	Nm	I_{LR}/I_{rated}	T_{LR}/T_{rated}	T_{max}/T_{rated}	kgm²	kg	L_{pfa}/L_{WA}
			1000rpm 6 极 6-pole												
			220VD / 380VY 50HZ												
80M	0.55	0CV4083C	1TL8004-0DC32-1 □□□	945	80.9	79.7	0.66	1.57	5.6	5.0	1.9	2.1	0.00357	19	44/55
90S	0.75	0CV4090C	1TL8004-0EC02-1 □□□	960	82.7	81.8	0.70	1.97	7.5	6.1	2.1	2.6	0.00555	24	45/57
90L	1.1	0CV4094C	1TL8004-0EC42-1 □□□	960	84.5	83.6	0.70	2.85	10.9	6.1	2.1	2.8	0.00773	28	45/57
			1000rpm 6 极 6-pole												
			380VD / 660VY 50HZ												
315S	75	0VC4310C8	1TL8004-3AC03-3 □□□	991	95.4	95.8	0.83	144	723	8.0	2.1	2.1	3.95	825	66/81
315M	90	0VC4312C8	1TL8004-3AC23-3 □□□	992	95.6	95.9	0.83	172	866	8.0	2.6	2.1	4.52	885	66/81
315L	110	0VC4315C8	1TL8004-3AC53-3 □□□	992	95.8	96.1	0.83	210	1059	8.0	2.8	2.3	5.02	965	66/81
315L	132	0VC4316C8	1TL8004-3AC63-3 □□□	992	96.0	96.2	0.82	255	1271	8.0	2.6	2.6	5.71	1030	66/81
355M	160	0VC4352C8	1TL8004-3BC23-3 □□□	993	96.2	96.5	0.84	300	1539	8.0	2.5	2.5	10.52	1610	76/91
355M	185	0VC4353C8	1TL8004-3BC33-3 □□□	993	96.3	96.6	0.84	345	1779	7.8	2.5	2.5	10.52	1630	76/91
355M	200	0VC4354C8	1TL8004-3BC43-3 □□□	992	96.3	96.6	0.84	375	1925	7.7	2.4	2.5	11.11	1680	76/91
355L	220	0VC4355C8	1TL8004-3BC53-3 □□□	994	96.4	96.6	0.84	415	2114	8.0	2.5	2.7	11.53	1760	76/91
355L	250	0VC4356C8	1TL8004-3BC63-3 □□□	993	96.5	96.7	0.84	470	2404	8.0	2.9	2.9	13.02	1880	76/91
			750rpm 8 极 8-pole												
			380VD / 660VY 50HZ												
315S	55	0VC4310D8	1TL8004-3AD03-3 □□□	738	93.7	94.7	0.80	111	712	7.7	1.8	2.0	3.62	805	73/88
315M	75	0VC4312D8	1TL8004-3AD23-3 □□□	740	94.2	95.0	0.80	151	968	7.7	2.1	2.1	4.14	865	73/88
315L	90	0VC4315D8	1TL8004-3AD53-3 □□□	741	94.4	95.1	0.81	179	1160	7.7	2.2	2.2	4.92	965	73/88
315L	110	0VC4316D8	1TL8004-3AD63-3 □□□	742	94.7	95.2	0.81	220	1416	7.7	2.5	2.5	5.62	1040	73/88
355M	132	0VC4352D8	1TL8004-3BD23-3 □□□	743	94.9	95.5	0.81	260	1697	7.7	2.2	2.2	9.67	1560	73/88
355M	160	0VC4353D8	1TL8004-3BD33-3 □□□	743	95.1	95.7	0.82	310	2057	7.7	2.3	2.3	11.26	1690	73/88
355L	185	0VC4355D8	1TL8004-3BD53-3 □□□	743	95.3	95.8	0.82	360	2378	7.7	2.3	2.3	11.87	1790	73/88
355L	200	0VC4356D8	1TL8004-3BD63-3 □□□	744	95.4	95.9	0.82	390	2567	7.8	2.5	2.5	12.75	1870	73/88

注：

[1] 关于其他电压与频率、绕组保护及接线盒位置的编码，请见“订货号”部分；

[2] 噪声值仅适用于电动机在 50 Hz 电源直接供电且空载运行时的情况，容差为 +3 dB。

Note:

[1] About the code of other voltage and frequency, winding protection and connection box position, please refer to Orde No.

[2] Noise value is only applicable to the direct power supply of the motor in 50Hz power supply and the condition of no-load operation, the tolerance is +3dB.

选件 Options

电动机订货号 Motor order code	选件号 [1)] Option Code	描述 Description	应用范围 Application Scope
电压与频率 **Voltages and frequency**			
1TL8004- □□□□ 2-1 □□□	–	220 VD / 380 VY 50 Hz（1.5 kW ~ 3 kW [2)]）	FS80 ~ 90
1TL8004- □□□□ 3-3 □□□	–	380 VD / 660 VY 50 Hz（4 kW ~ 315 kW [2)]）	FS80 ~ 90
1TL8004- □□□□ 2-2 □□□	–	230 VD / 400 VY 50 Hz	FS80 ~ 90
1TL8004- □□□□ 3-4 □□□	–	400 VD / 690 VY 50 Hz	FS80 ~ 90, FS315 ~ 355
1TL8004- □□□□ 2-3 □□□	–	240 VD / 415 VY 50 Hz	FS80 ~ 90
1TL8004- □□□□ 3-5 □□□	–	415 VD 50 Hz	FS80 ~ 90, FS315 ~ 355
1TL8004- □□□□ 9-0 □□□	M2A [10)]	220VD/380VY 60Hz，50Hz 功率输出 power output	FS80 ~ 90
	M2B [10)]	380VD/660VY 60Hz，50Hz 功率输出 power output	FS80 ~ 90, FS315 ~ 355
	M2C [10)]	440VY 60Hz，50Hz 功率输出 power output	FS80 ~ 90
	M2D [10)]	440VD 60Hz，50Hz 功率输出 power output	FS80 ~ 90, FS315 ~ 355
	M2E [10)]	460VY 60Hz，50Hz 功率输出 power output	FS80 ~ 90
	M2F [10)]	460VD 60Hz，50Hz 功率输出 power output	FS80 ~ 90, FS315 ~ 355
绕组保护 **Motor protection**			
1TL8004- □□□□□ - □□ A □	–	无绕组保护 Without motor protection	FS80 ~ 90, FS315 ~ 355
1TL8004- □□□□□ - □□ B □	–	绕组带一组三芯串联的 PTC 热敏电阻用于跳闸 Motor protection with PTC thermistors with three embedded temperature sensors for tripping	FS80 ~ 90, FS315 ~ 355
1TL8004- □□□□□ - □□ C □	–	绕组带两组三芯串联的 PTC 热敏电阻用于报警和跳闸 Motor protection with PTC thermistors with six embedded temperature sensors for alarm & tripping	FS80 ~ 90, FS315 ~ 355
1TL8004- □□□□□ - □□ H □	–	绕组带 3 个 Pt100 测温元件 Installation of three PT100 resistance thermometers	FS315 ~ 355
1TL8004- □□□□□ - □□ J □	–	绕组带 6 个 Pt100 测温元件 Installation of six PT100 resistance thermometers	FS315 ~ 355

选件 Options

电动机订货号 Motor order code	选件号 [1] Option Code	描述 Description	应用范围 Application Scope
线圈和绝缘 Windings and insulation			
–	N01	温度等级 155（F），使用 155（F），带有服务系数（SF1.15） Temperature class 155 (F), used according to 155 (F), with service factor (SF1.15)	FS80 ~ 90, FS315 ~ 355
–	N10	180（H）度温度等级绝缘 Temperature class 180（H）	FS80 ~ 90, FS315 ~ 355
–	Q04[2]	绕组带 220 V 防潮加热带 Anti-condensation heater for 220 VAC (spaces heater)	FS80 ~ 90, FS315 ~ 355
电动机接线盒 Motor connection box			
–	R10[13]	接线盒直接旋转 90°，进线口朝向驱动端 Rotation of the connection box through 90°, entry from DE	FS80 ~ 90, FS315 ~ 355
–	R11	接线盒直接旋转 90°，进线口朝向非驱动端 Rotation of the connection box through 90°, entry from NDE	FS80 ~ 90, FS315 ~ 355
–	R12	接线盒直接旋转 180° Rotation of the connection box through 180°	FS80 ~ 90, FS315 ~ 355
–	X07	铸铁接线盒 cast iron connection box	FS80 ~ 90, FS315 ~ 355
–	X47	电机接线盒标配 2 个自锁葛兰 Connection boxes of the motors include 2 self-locking cable gland	FS315 ~ 355
轴承 Bearings			
–	Q72	轴承带两个 PT100 测温元件 Installation of 2PT100 screw-in resistance thermometers for bearing	FS315 ~ 355
–	L80	SKF 轴承 SKF Bearing	FS80 ~ 90, FS315 ~ 355
–	L81	其他进口品牌轴承 Other imported brand bearings	FS80 ~ 90, FS315 ~ 355
–	L22[11]	增强悬臂力 Increased cantilever forces	FS315 ~ 355
–	L51[12]	非驱动端轴承绝缘 Bearing insulation NDE	FS315 ~ 355

选件 Options

电动机订货号 Motor order code	选件号 [1] Option Code	描述 Description	应用范围 Application Scope
机械设计和防护等级 Mechanical design and degrees of protection			
–	L72[3)4)]	第二标准轴伸 Second standard shaft extension	FS80 ~ 90, FS315 ~ 355
–	P80	全圆法兰 Full circle flange	FS80 ~ 90，FS315
–	H20	IP65 防护等级 IP65 degree of protection (non-heavy-sea)	FS80 ~ 90, FS315 ~ 355
–	H22	IP56 防护等级（非高海况） IP56 degree of protection (non-heavy-sea)	FS80 ~ 90, FS315 ~ 355
–	H00[5)]	电动机带防护罩 Motor with protective cover	FS80 ~ 90, FS315 ~ 355
–	H03[6)]	排水孔 Drainage holes	FS80 ~ 90, FS315 ~ 355
–	F90[7)]	风机电机（无风扇风罩，非驱动端全封闭） Fan motor(no fan cover, NDE fully enclosed)	FS80 ~ 90, FS315 ~ 355
–	D03	用于环境温度 -40 ºC ~ +40 ºC 下使用的电机 Applicable to the motors that is used in the coolant temperature of -40ºC~+40ºC	FS80 ~ 90, FS315 ~ 355
–	X50[8)]	安装欧姆龙编码器（E6B2-CWZ6C-1024）和独立驱动风扇 Install OMRON encoder (E6B2-CWZ6C-1024)and independent drive fan	FS315 ~ 355
–	W74 [9)]	安装欧姆龙编码器（E6B2-CWZ1X-1024）和独立驱动风扇 Install the OMRON encoder(E6B2-CWZ1X-1024) and independent drive fan	FS315 ~ 355
–	F70[5)]	电动机带独立驱动风扇 Motors with the independent drive fan	FS80 ~ 90, FS315 ~ 355

选件 Options

电动机订货号 Motor order code	选件号 [1] Option Code	描述 Description	应用范围 Application Scope
铭牌和测试证书 Rating plate and test certificates			
–	B80	出厂检验报告 Acceptance test certificate 3.1 in accordance with EN 10204	FS80 ~ 90, FS315 ~ 355
喷漆 Paint finish			
–	S01	不喷漆，只带底漆 Unpainted, only primed	FS80 ~ 90, FS315 ~ 355
–	W88	适用 TH，W，F1，WF1 以及海洋性气候环境用电机 Design for TH, W, F1, WF1 and Sea air resistant	FS80 ~ 90, FS315 ~ 355
包装 Packing			
–	B90	包装（FS80 ~ 132 电动机采用纸箱包装，FS160 ~ 355 电动机采用木箱包装） Packing(FS80~132 motors adopt the carton packaging, FS160~355 motors adopt the wooden cases packaging)	FS80 ~ 90, FS315 ~ 355

1) 订货时，电动机订货号需带“-Z”，另外附带上选件号；
2) 选择此选件，接线盒将更改为铸铁壳
3) H00、F70 均不能与此选件并用；
4) 非驱动端上的第二轴伸尺寸见外形尺寸；
5) 无法与选件号 L72 并用；
6) 仅适用于水平安装的电动机。对于 IM B5 和 IM B14 安装结构型式的电动机，选择此选件时，必须确保接线盒处于机座顶端。对于其它安装结构型式的电机请咨询西门子；
7) 无风扇和风罩时，电动机的长度将减小 Δl。如需要按照铭牌上功率数值输出时电动机需要外部冷却。客户应当采用正确的冷却方式，没有或错误的冷却方式都将减少电动机的使用寿命，甚至会损坏电动机；
8) SINAMICS 变频器联结 Omron 编码器（E6B2-CWZ6C）时，变频器需要一些特殊配置。详细信息，请咨询西门子热线；
9) SINAMICS 变频器可以直接与 Omron 编码器（E6B2-CWZ1X）联结；
10) 根据国标要求，60Hz 频率下不考核能效要求；
11) FS 315-355，L20 与 L22 不能同时选用；
12) FS355 4P-8P 非驱动端轴承改为 6320 C3（卧式安装）或 7320（立式安装）；
13) 不适用 FS80-90 法兰安装电机。

1) Order No. supplement Z with option code when ordering.
2) When choose these options, the connection boxes will be changed to cast iron shell.
3) H00、F70 can't be used with this option.
4) Second standard shaft extension on NDE is shown in the dimension drawings.
5) Unable to be used with the option L72.
6) Only applicable to the vertical mounting motors. For the construction type of IM B5 and IM B14, when choose this option, it is necessary to ensure the connection box is on top of the frame. For other construction types, please specially consult with SIEMENS.
7) When without the fans or the shells, the motor length will be decreased by Δ1. If it is necessary to output according to the nameplate power, the motor requires external cooling. Customers are supposed to adopt the right cooling method, without or wrong cooling methods will decrease the service life for the motors. even damage the motors.
8) When the SINAMICS frequency converter is coupled with the Omron encoder(E6B2-CWZ6C), the frequency converter requires some special configuration. For more information, please consult the SIEMENS hotline.
9) SINAMICS frequency converter can be directly coupled with the Omron encoder(E6B2-CWZ1X).
10) According to the requirements of the GB, the energy efficiency requirement is not evaluated under the frequency of 60Hz.
11) For FS 315-355, L20+L22 can't be selected.
12) The bearing will change to 6320 C3(Horizontal mounting) or 7320(Vertical mounting) in FS355 4P-8P.
13) Not applicable to the FS80~90 flange mounted motors.

外形尺寸 Dimension drawings

1TL8004 铸铁系列电机 Cast-iron series 1TL8004
机座号从 80-90，315-355 Frame sizes 80-90，315-355

IM B3 安装结构方式 Type of construction IM B3

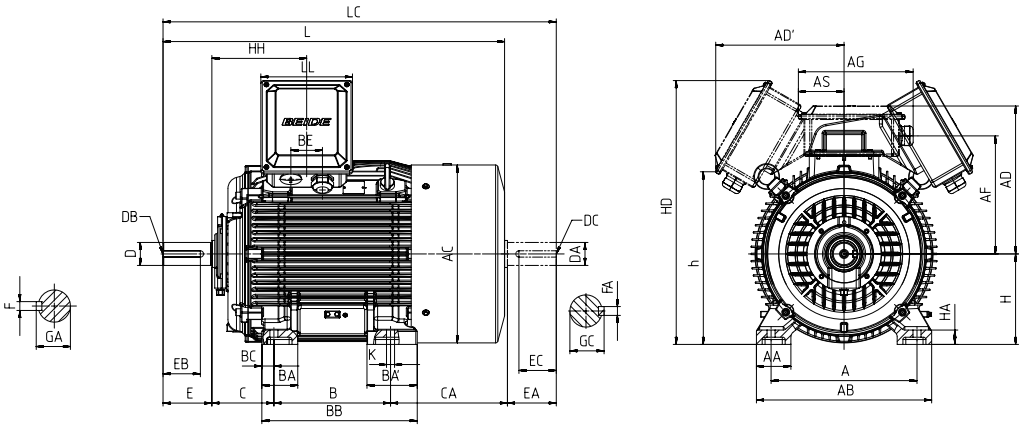

IM B35 安装结构方式 Type of construction IM B35

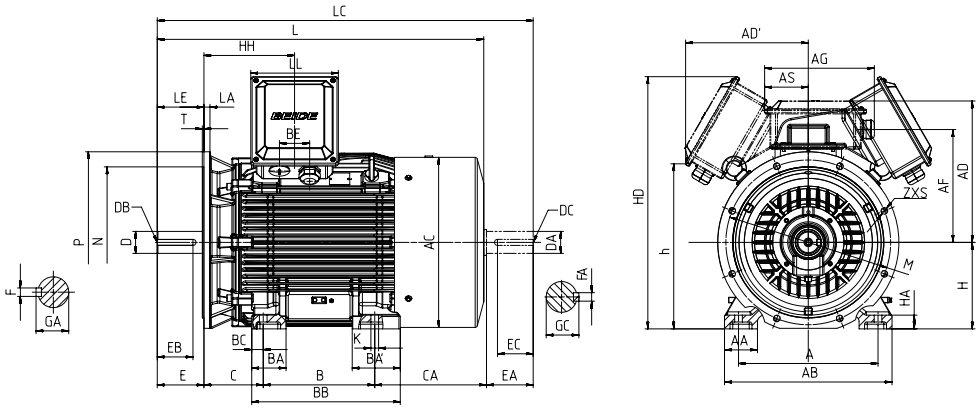

机座号 Frame size	类型 Type 1TL8004-	极数 Poles	尺寸图依据 IEC 标准 Dimension designation according to IEC standards													
			A	AA	AB	AC[1)]	AD / AD'	AF / AF'	AG	AH	AS	B[2)]	BB	BC	BE	C
80M	0D□2	2,4	125	34	160	172	150	113	135	196	55	100	130	15	-	50
	0D□3	2,4,6														
90S	0E□0	2,4,6	140	36	175	188	155	121	135	206	55	100	140	20	-	56
90L	0E□4											125	165			
315S	3A□0	2	508	120	610	640	520/450	411	400	860	160	406	541	42	110	216
		4,6,8														
315M	3A□2	2	508	120	610	640	520/450	411	400	860	160	457	541	42	110	216
		4,6,8														
315L	3A□5	2	508	120	610	640	520/450	411	400	860	160	508	592	42	110	216
	3A□6/3A□7	2														
	3A□5/3A□6/3A□7	4														
		6,8														
355M	3B□2	2	610	120	730	712	615/495	504	457	975	185	560	696	68	125	254
		4,6,8														
	3B□3	2	610	120	730	712	615/495	504	457	975	185	560	696	68	125	254
		4,6,8														
	3B□4	6	610	120	730	712	615/495	504	457	975	185	560	696	68	125	254
355L	3B□5	2	610	120	730	712	615/495	504	457	975	185	630	750	68	125	254
		4,6,8														
	3B □ 6	2	610	120	730	712	615/495	504	457	975	185	630	750	68	125	254
		4,6,8														

1) 包含螺栓头的尺寸。 Measured across the bolt heads.

IM B5 以及 IM V1 安装方式 Type of construction IM B5 and IM V1

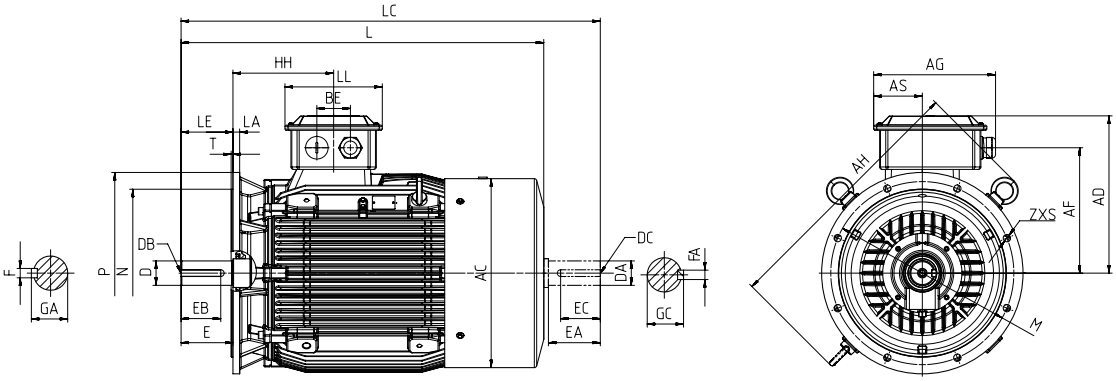

尺寸图依据 IEC 标准 Dimension designation according to IEC standards										驱动端轴伸直径 DE shaft extensiion						非驱动端轴伸（选件号为 L72） NDE shaft extension (option code L72)				
CA[2)]	H	h	HD	HA	HH	K / K'	L	LC	LL	D	DB	E	EB	F	GA	DA	EA	EC	FA	GC
147	80	31		10	76	10	335	377	110	19	M6	40	25	6	21.5	19	40	25	6	21.5
161	90	35		10	76	10	365	417	110	24	M8	50	36	8	27	24	50	36	8	27
166							395	447												
413	315	601	925	50	330	28	1165	1315	320	65	M20	140	100	18	69	65	140	100	18	69
							1195	1375		80		170	130	22	85	80	170	130	22	85
362	315	601	925	50	330	28	1165	1315	320	65	M20	140	100	18	69	65	140	100	18	69
							1195	1375		80		170	130	22	85	80	170	130	22	85
361	315	601	925	50	330	28	1215	1365	320	65	M20	140	100	18	69	65	140	100	18	69
456							1310	1460		65		140	100	18	69	65	140	100	18	69
456							1340	1520		80		170	130	22	85	80	170	130	22	85
361							1245	1425		80		170	130	22	85	80	170	130	22	85
506	355	731	1080	53	322	28	1450	1600	370	75	M20	140	100	20	79.5	75	140	100	20	79.5
							1480	1660		95	M24	170	130	25	100	95	170	130	25	100
506	355	731	1080	53	322	28	1450	1600	370	75	M20	140	100	20	79.5	75	140	100	20	79.5
							1480	1660		95	M24	170	130	25	100	95	170	130	25	100
506	355	731	1080	53	322	28	1480	1660	370	95	M24	170	130	25	100	95	170	130	25	100
516	355	731	1080	53	322	28	1530	1680	370	75	M20	140	100	20	79.5	75	140	100	20	79.5
							1560	1740		95	M24	170	130	25	100	95	170	130	25	100
516	355	731	1080	53	322	28	1530	1680	370	75	M20	140	100	20	79.5	75	140	100	20	79.5
							1560	1740		95	M24	170	130	25	100	95	170	130	25	100

2) 该尺寸为 DIN EN 50347 标准所列机座号对应尺寸。This dimension is assigned in DIN EN 50347 to the frame size listed.

外形尺寸 Dimension drawings

法兰尺寸 Flange dimension

IM B5、IM B35、IM V1、IM V3 安装结构型式 Type of construction IM B5, IM B35, IM V1, IM V3

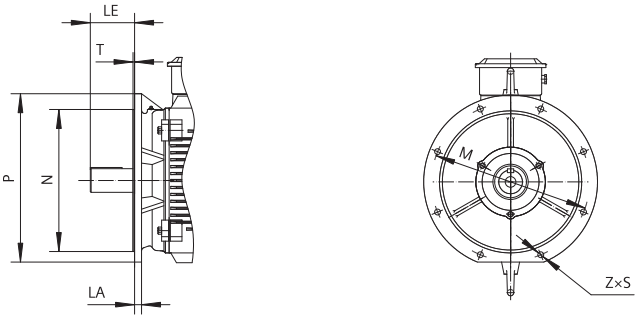

机座号 Frame size	安装结构形式 Type of construction	法兰带通孔（FF / A）/ 法兰带内螺纹孔（FT / C） Flange with through holes (FF/A) / tapped holes (FT/C)
		按 DIN / EN 50 347 标准 According to DIN EN 50347
80	IM B5, IM B35, IMV1, IM V3 IM B14, IM V18, IM V19	FF 165 FT 100
90	IM B5, IM B35, IMV1, IM V3 IM B14, IM V18, IM V19	FF 165 FT 115
315	IM B5, IM B35, IMV1, IM V3	FF 600
355	IM B5, IM B35, IMV1, IM V3	FF 740

法兰尺寸 Flange dimension

IM B14、IM V18、IM V19 安装结构型式 Type of construction IM B14, IM V18, IM V19

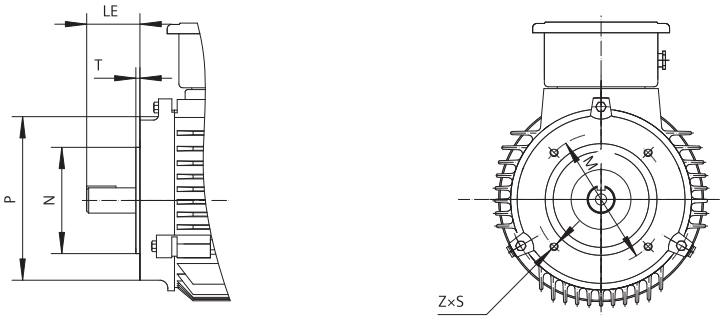

	尺寸图依据 Dimension designation according to IEC standards							
	LA	LE	M	N	P	S	T	Z
	10 –	40 40	165 100	130 80	200 120	12 M 6	3.5 3	4 4
	10 –	50 50	165 115	130 95	200 140	12 M 8	3.5 3	4 4
	22	140 / 170	600	550	660	24	6	8
	25	140 / 170	740	680	800	24	6	8

西门子电机（中国）有限公司

地址：江苏省仪征市汽车工业园众鑫路 99 号
电话：+86 514 85718108
传真：+86 514 85718083
邮编：211400
邮箱：beide-motor.ssml@siemens.com
网址：www.beide-motor.cn

Siemens Standard Motors Ltd.

Address: No.99,Zhongxin Road, Yizheng City, Jiangsu Province
211400,P.R.China
Tel: +86 514 85718108
Fax: +86 514 85718083
Post code: 211400
E-Mail: beide-motor.ssml@siemens.com
Web site: www.beide-motor.cn

774-SH902774-03182

西门子电机（中国）有限公司版权所有
如有改动 恕不事先通知。