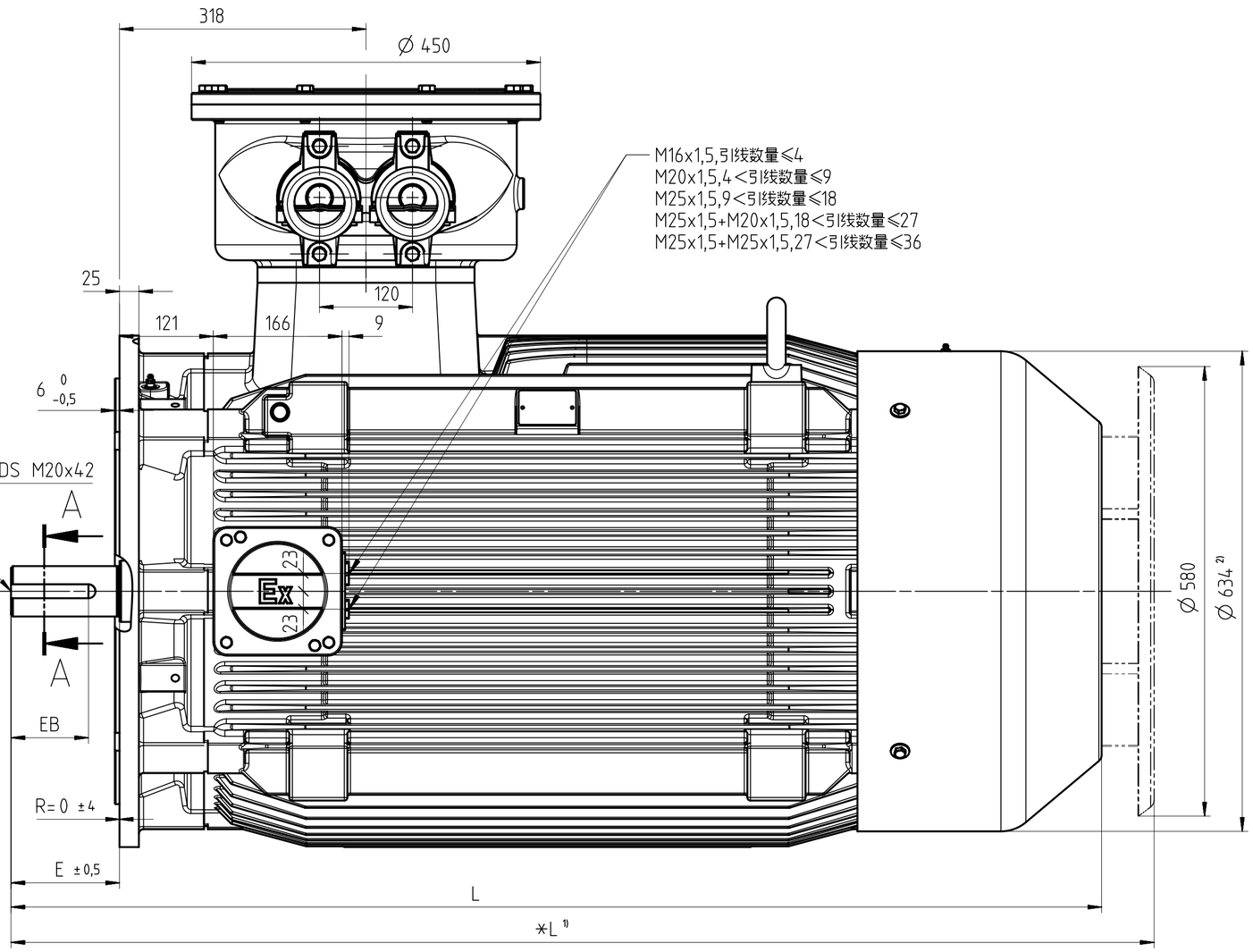

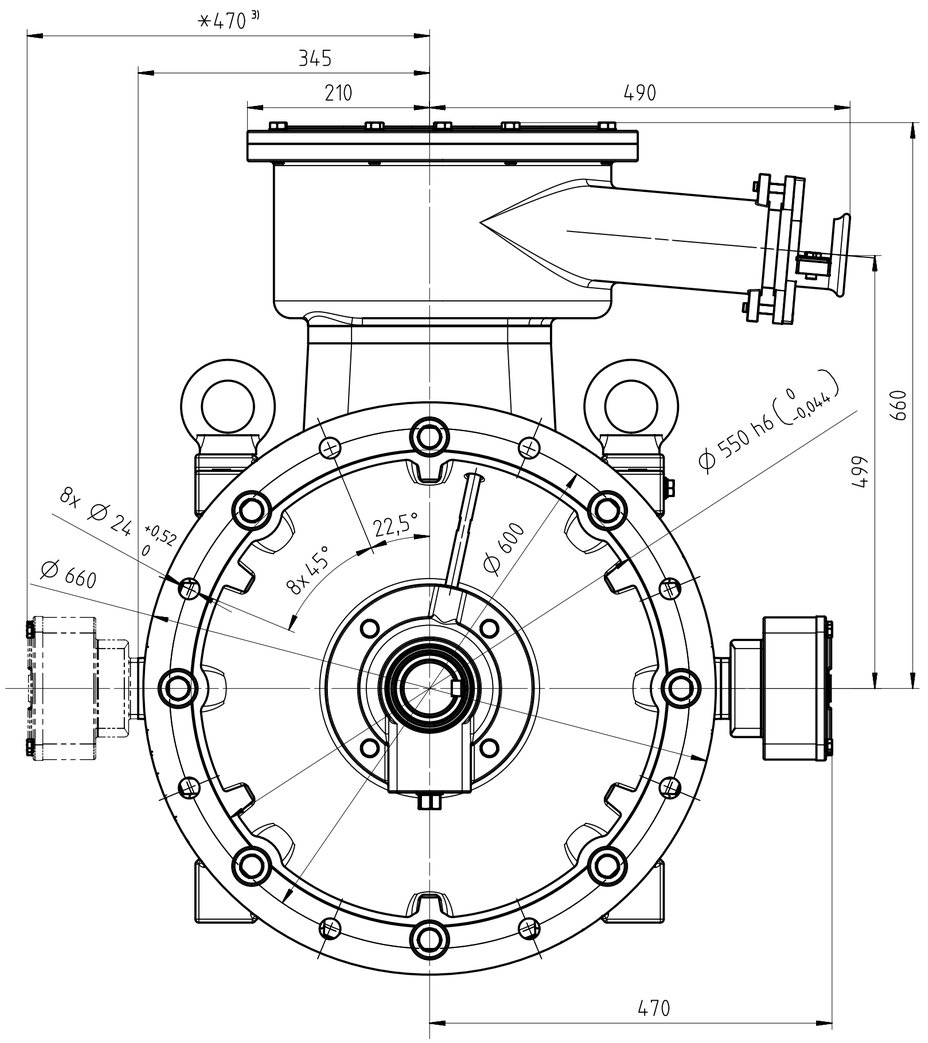

孔径	Ø 31	Ø 36	Ø 45	Ø 50	Ø 60	Ø 70
电缆孔径	Ø 30	Ø 35	Ø 44	Ø 49	Ø 59	Ø 69

Type	D	E	EB	F	G	GA	L	*L
1MT8004-3AA0	Ø 65	140	100	18	58	69	1260	1330
1MT8004-3AA2								
1MT8004-3AA5							1410	1480
1MT8004-3AA6								
1MT8004-3AA7								
1MT8004-3AB0	Ø 80	170	130	22	71	85	1290	1360
1MT8004-3AB2								
1MT8004-3AB5							1440	1510
1MT8004-3AB6								
1MT8004-3AB7								
1MT8004-3AC0							1290	1360
1MT8004-3AC2								
1MT8004-3AC5							1440	1510
1MT8004-3AC6								
1MT8004-3AD0							1290	1360
1MT8004-3AD2								
1MT8004-3AD5							1440	1510
1MT8004-3AD6								

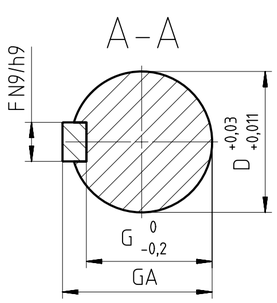

主出线口密封结构

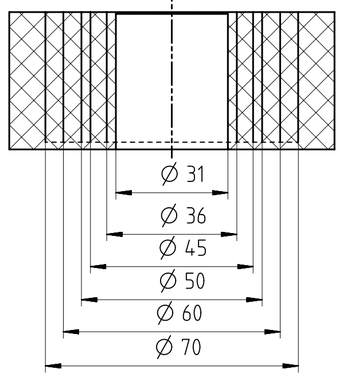

1) 当选用驱动端向下的安装方式时，电机标配防雨罩。
If the motor is installed vertically with drive-end downward, fan cover will be equipped with protection cover as standard.

2) 包含螺栓头尺寸。
Includes bolt head dimensions.

3) 仅针对R58选项。
Only for R58 option.

Tolerance	Surface	Material	Weight 0.99 kg	Scale mm
1MT8004-3A 外形安装尺寸图 R57,R58 1MT8004-3A IM B5 Ex db IIB T4 Gb	Author Chen Creator 2024-07-17 Chen Approval 2024-08-06 Ji Department IN HVM PLM CN R&D2 Change Order P1A00012182	DIMENSION SHEET R57,R58 1MT8004-3A IM B5 Ex db IIB T4 Gb Product MLFB/Product-ID		Doc Type TB / Z
INNOMOTICS	Doc State Released Revision (Counter) 001 Revision State AA	Item No Doc No L1D30322379A		Paper Size A2 1st Language en 2nd Language de
©Innomotics 2024	Project No	Ref No		Sheet 1 of 1

Branding disclaimer applies Restricted TB 003