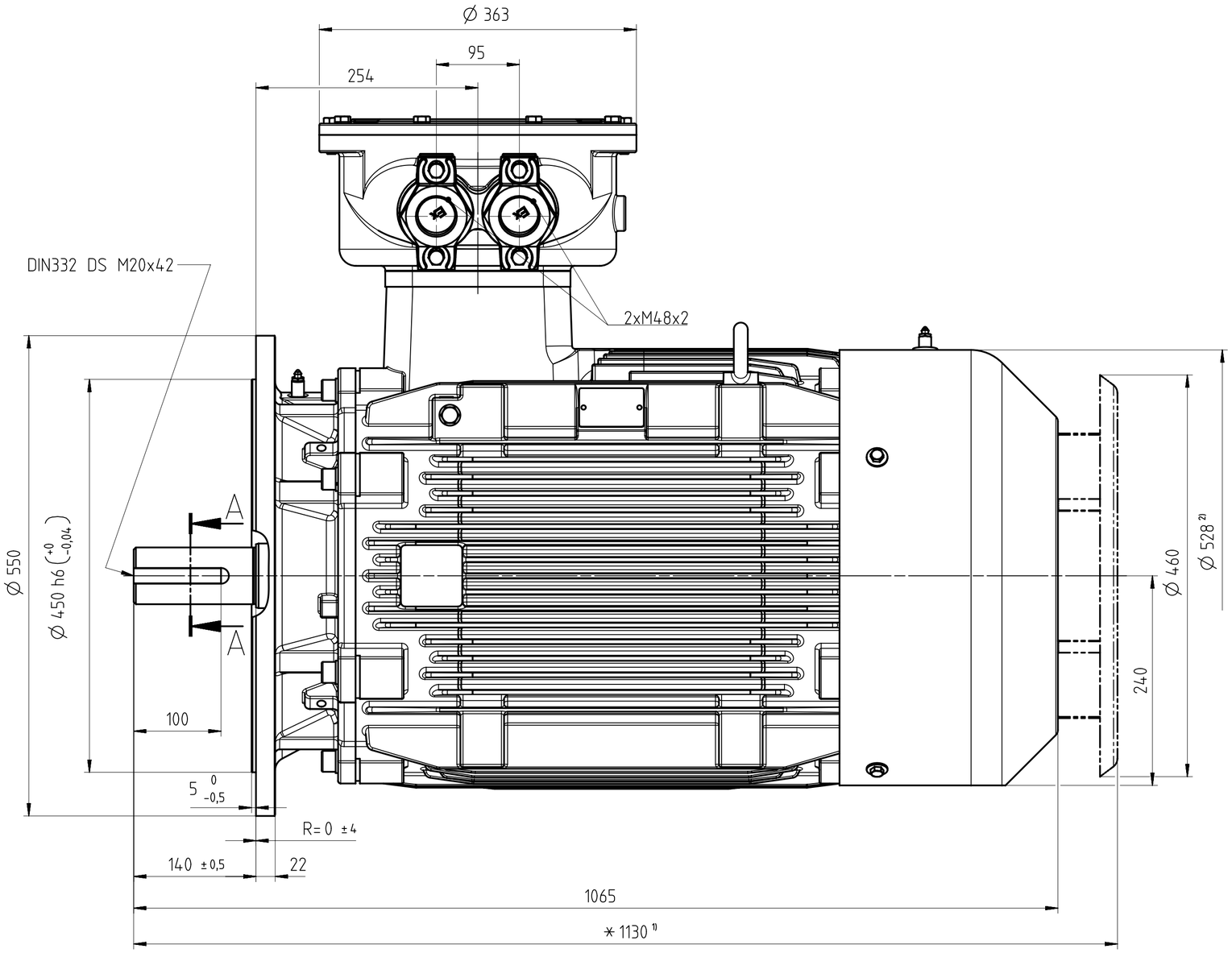

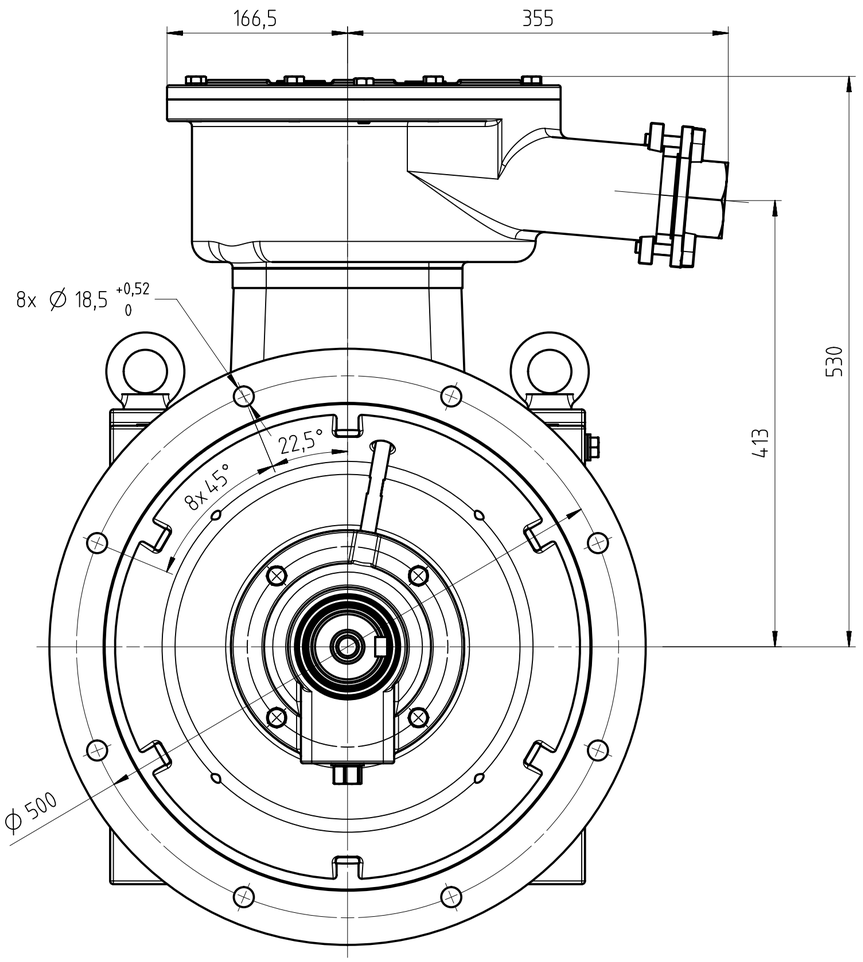

孔　　径	Ø 20	Ø 26	Ø 32	Ø 38	Ø 42
电缆外径	Ø 19	Ø 25	Ø 31	Ø 37	Ø 41

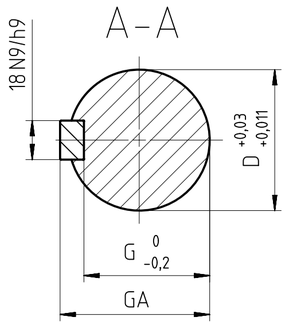

主出线口密封结构

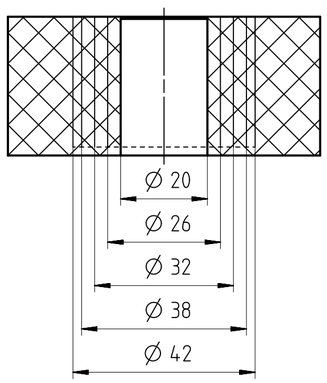

Type	D	G	GA
1MT8004-2CA2	Ø 60	53	64
1MT8004-2CB2	Ø 65	58	69
1MT8004-2CC2			
1MT8004-2CD2			

1) 当选用驱动端向下的安装方式时，电机标配防雨罩。
If the motor is installed vertically with drive-end downward, fan cover will be equipped with protection cover as standard.

2) 包含螺栓头尺寸。
Includes bolt head dimensions.

Tolerance	Surface	Material	Weight 0.99 kg	Scale mm
1MT8004-2C 外形安装尺寸图X97 1MT8004-2C IMB5 Ex db IIB T4 Gb	Author Jiang Yong Hua	DIMENSION SHEET X97 1MT8004-2C IM B5 Ex db IIB T4 Gb		
	Creator 2024-02-28 Jiang			
	Approval 2024-07-30 Ji			
	Department LDA PLM R&D-M-CN			
	Change Order P1A00012072	Product MLFB/Product-ID		Doc Type TB / Z
INNOMOTICS	Doc State Released	Item No		Paper Size A2
	Revision (Counter) 001 Revision State AA	Doc No A5E53640454A		1st Language en 2nd Language de
©Innomotics 2024	Project No	Ref No		Sheet 1 of 1

Branding disclaimer applies　Restricted　TB 003